ChEE 413

Process Control

Final Exam

Spring 2000

Problem One	_____
Problem Two	_____
Problem Three	_____
Problem Four	_____
Problem Five	_____
Total	_____

Problem One

a) (10 points) For the following change in setpoint, the following time response output curve is seen:

Circle the following that may be likely to be true about this process:

Critically damped second order system	First order system with time delay
Overdamped second order system	Underdamped second order system
Undamped first order system	Critically damped first order system
Overdamped first order system	Offset > 1
Offset > 0	Offset < 0
Offset = 0	Unstable
Critically stable	Stable

b) (5 points) Using the same diagram above, describe in your own words how you would find the overall steady state gain.

Problem Two

Look at the following standard block diagram for a process. Use this block diagram for the following THREE questions

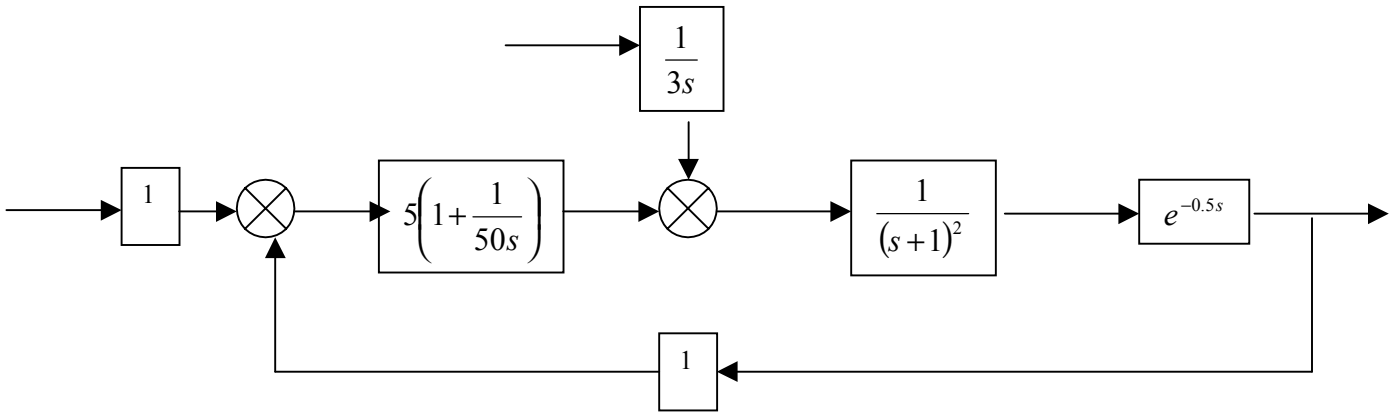

a) (20 points) Use the open loop amplitude ratio method to check the stability of the system. **Note: if you cannot solve for ω on your calculator, use ω = 15 You must have the correct ϕ equation to get full credit.**

b) (20 points) Also using the block diagram from the previous page, use a closed loop Routh stability test to determine if the system is stable

c) (5 points) In your own words, describe which result from parts a and b (either the amplitude ratio result or Routh array result) may be more trustworthy.

Problem Three

For the next TWO questions, use the following standard block diagram and Bode plot.

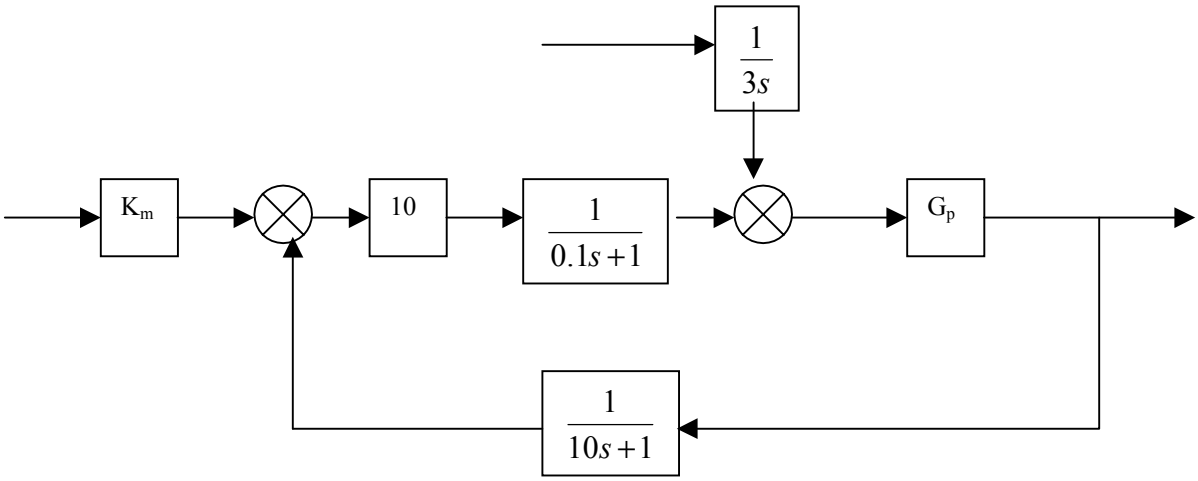

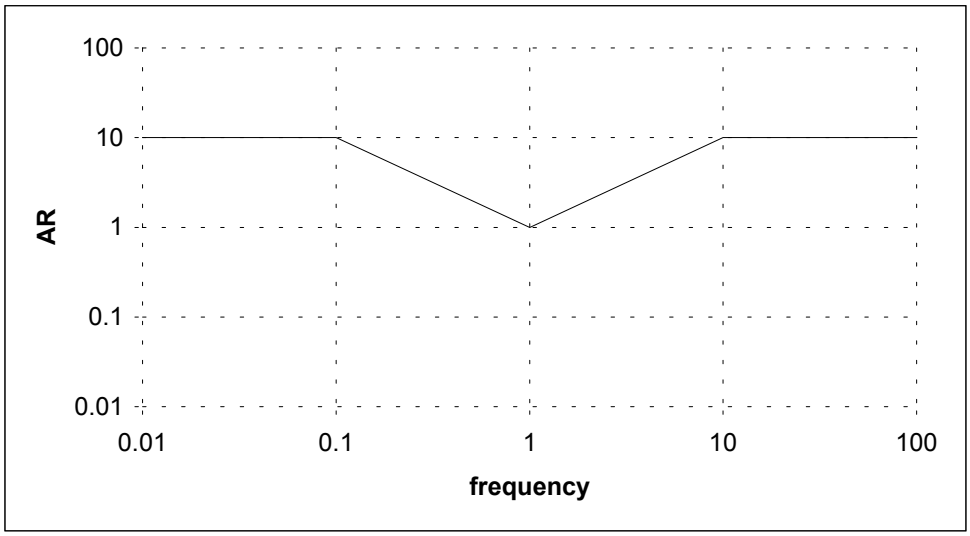

a) (20 points) Determine the most likely transfer function, G_p, to describe the process.

b) (10 points) Using the Bode plot on the previous page, how would adding integral control change the Bode AR plot? You may make a sketch on the diagram to help explain your answer. Comment on the affect integral control has on stability.

Problem Four

You have the following three tank system:

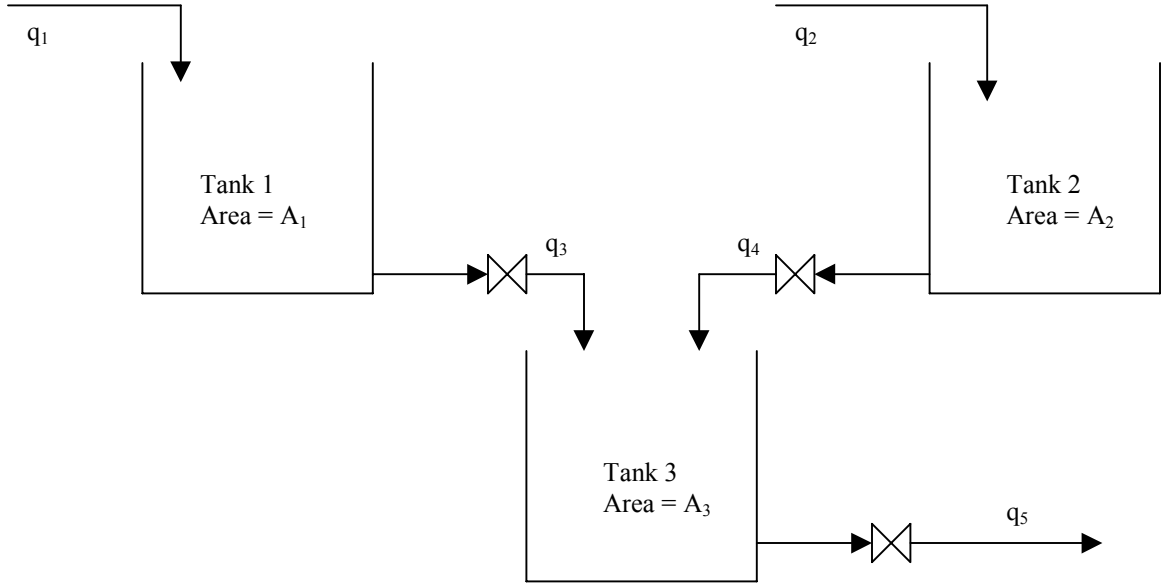

(10 points) Develop differential equation balances to describe the height in each tank.

(10 points) Change each differential equation into a standard transfer function like H(s) = aX(s) + bY(s) +.... Assume that each valve has a linear resistance to flow based on the height of the liquid in the tank:

$$\mathbf{q_i = h_j/R_i.}$$

(15 points) Then find a general transfer function to relate the height in tank three to the flowrate into tank 1.

(5 points) Describe in your own words why the flowrate into tank 2 does or does not appear in this transfer function.

Problem Five

a) (25 points) Solve the following differential equation (i.e., find an equation that describes x in terms of t):

$$\frac{d^2x}{dt^2} + 4\frac{dx}{dt} + 8x = 10$$

where x and dx/dt = 0 at t = 0

b) (5 points) What is the steady state value for x(t) as t goes to infinity?